AT-2712 GAV HAVALI SOMUN SÖKME

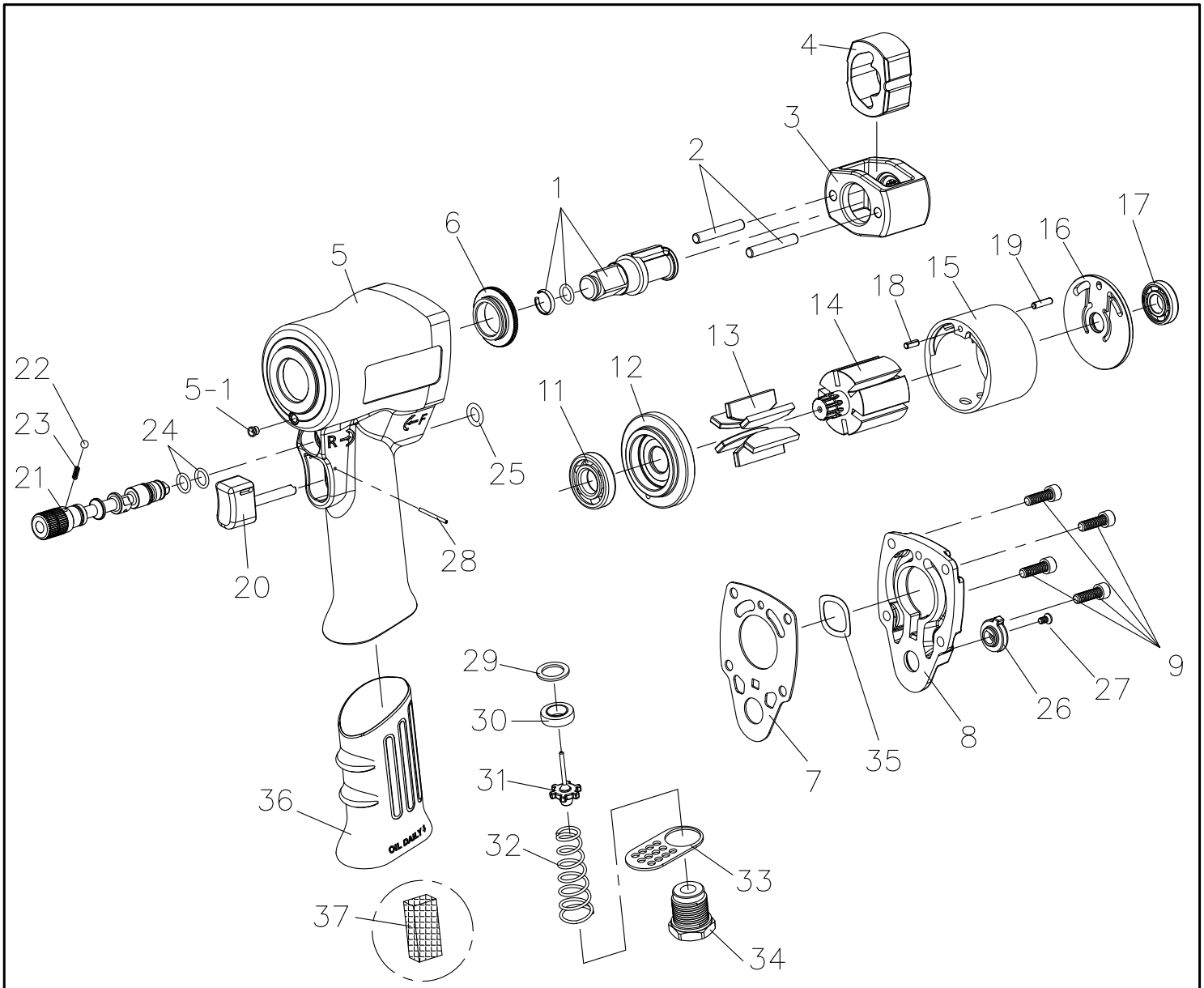

No.	Part No.	Parça adı	Adet	No.	Part No.	Parça Adı	Adet
1	27-001-4	ANVIL UNIT	1	28	27-028	SPRING PIN	1
2	27-002	HAMMER PIN	2	29	27-029	SEAL BUSHING	1
3	27-003	HAMMER FRAME	1	30	27-030	SEAL	1
4	27-004	HAMMER	1	31	27-031	TIP VALVE	1
5	27-005	HOUSING	1	32	27-032	SPRING	1
5-1	27-005-1	GREASE FITTING	1	33	27-033	DEFLECTOR	1
6	27-006	HAMMER CASE BUSHING	1	34	27-034	AIR INLET	1
7	27-007	PACKING	1	35	27-035	WASHER	1
8	27-008	REAR COVER	1	36	27-036	GRIP	1
9	27-009	HEX.SOC.HD-BOLT	4				
11	27-011	BEARING	1	**Anvil 3/8"**			
12	27-012	FRONT BEARING PLATE	1	1	27-001-3	ANVIL UNIT	1
13	27-013	BLADES	6	37	27-037	SILENCER	1
14	27-014	ROTOR	1				
15	27-015	CYLINDER	1				
16	27-016	REAR END PLATE	1				
17	27-017	BEARING	1				
18	27-018	SPRING PIN	1				
19	27-019	SPRING PIN	1				
20	27-020	TRIGGER	1				
21	27-021	REVERSE VALVE	1				
22	27-022	BALL	1				
23	27-023	POSITION SPRING	1				
24	27-024	O-RING	2				
25	27-025	O-RING	1				
26	27-026	POWER MANAGEMENT KNOB	1				
27	27-027	FLAT HD.SCREW	1				

GAV HAVALI EL ALETLERİ SAN.TİC.LTD.ŞTİ
Tel:0216 540 52 80 / 0549 540 52 80